WHEELS, FRONT - Z26NEY99A4/B4/A6/B6 (C750909)

2026 RZR - RZR XP S 1000 ULTIMATE (R01) - Z26NEY99A4/B4/A6/B6

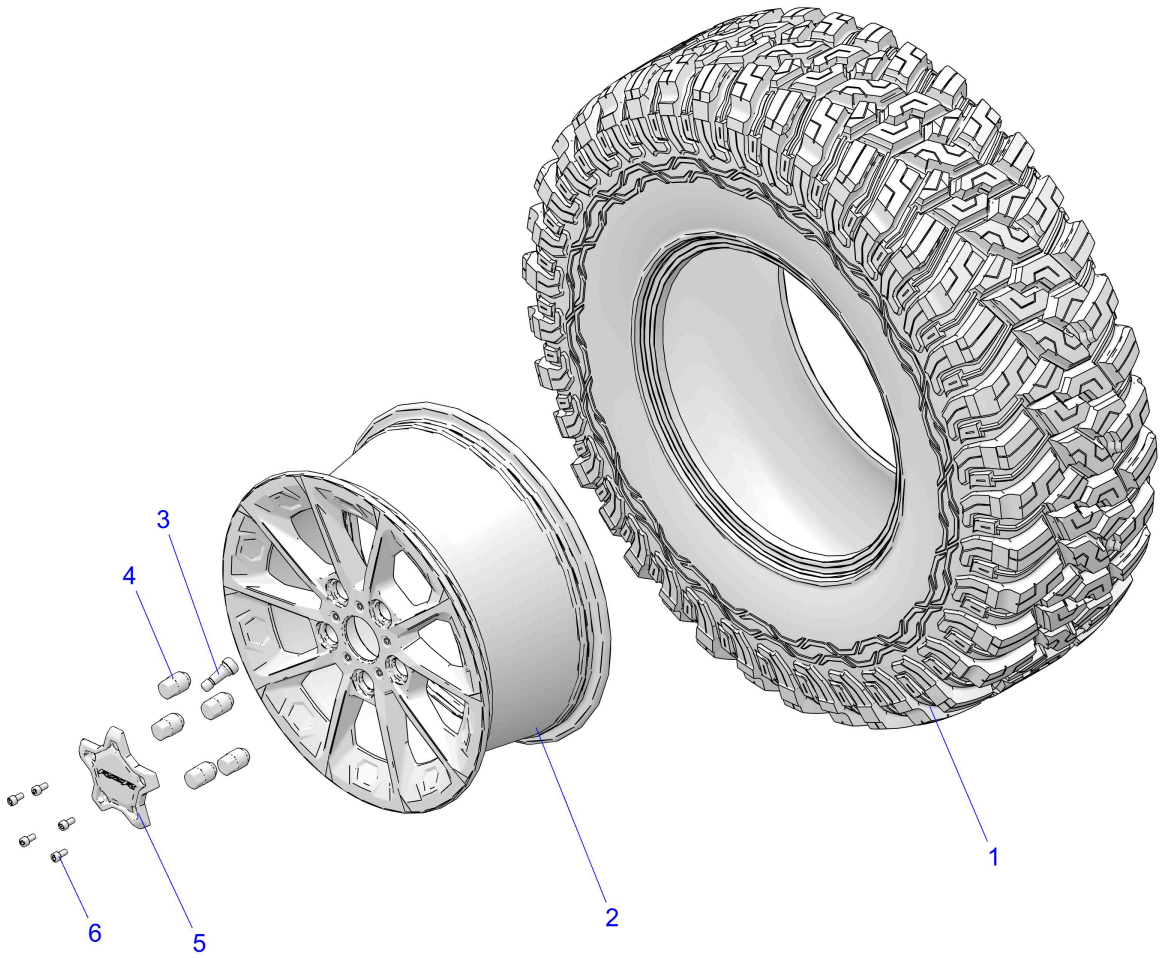

© 2025 Polaris Industries Inc.

C750909

Reference #	*Part#*	*Description*	*Quantity*
1	5419239	TIRE-TREKKER,RADIAL,32X10R15	2
2	1525534-744	RIM-15X7,CAST,MFB	2
3	1521982	VALVE-RIM	2
4	7547816	NUT-WHEEL,M12X1.5,TAPERED,BLK	10
5	1525535-744	CAP-RIM 5 LUG,MFB	2
6	7528297	SCR-SH-M6X1.0X12 10.9 ZNB	10

Copyright 1996-2026 Polaris Industries U.S.A All rights reserved.